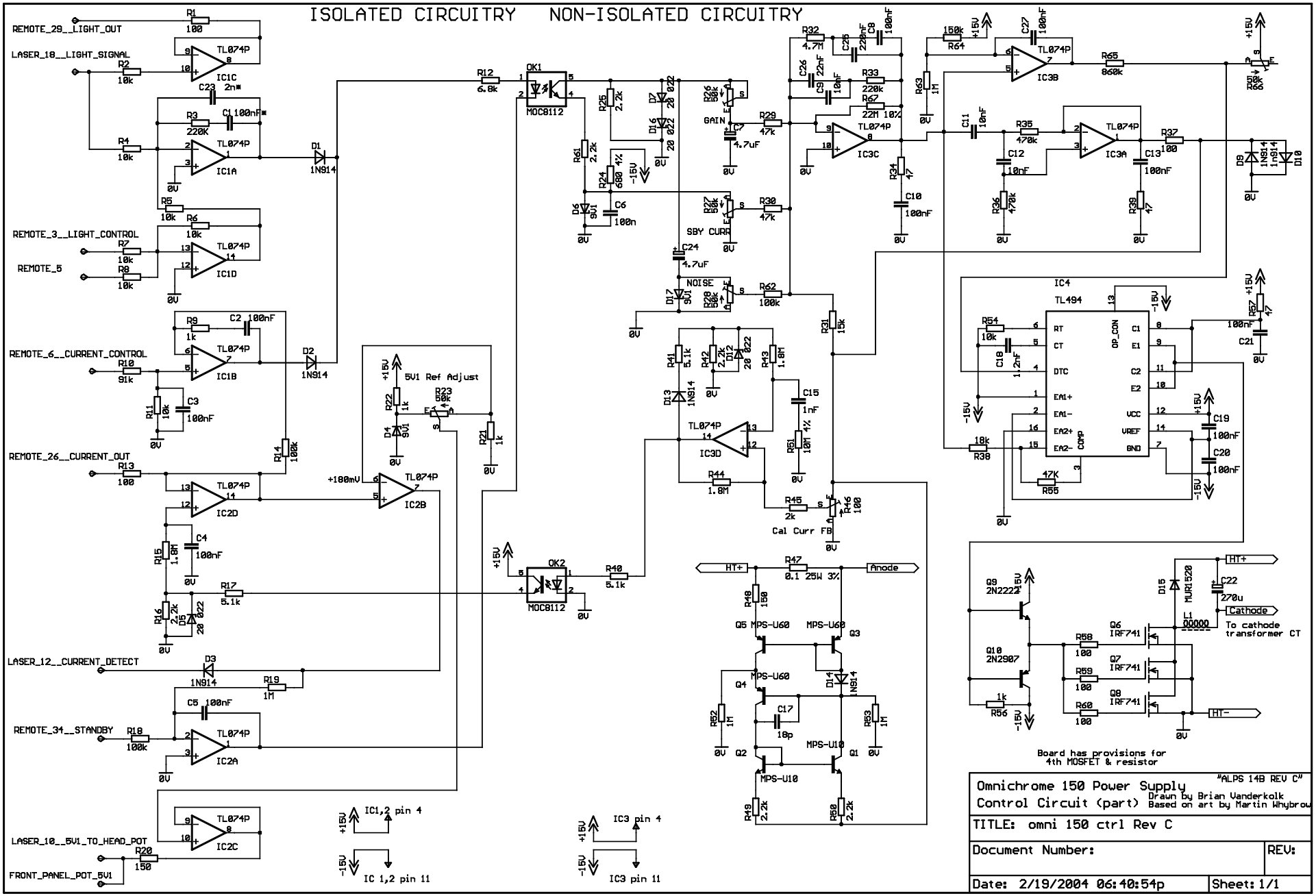Visage eXPert PDF Copyright © 1998,2004 Visage Software
This document was created with free TRIAL version of Visage eXPert PDF.This watermark will be removed
after purchasing the licensed full version of Visage eXPert PDF. Please visit http://www.visagesoft.com for more details