Sam's Modular HeNe Laser Power Supply 1 (SG-HM1)

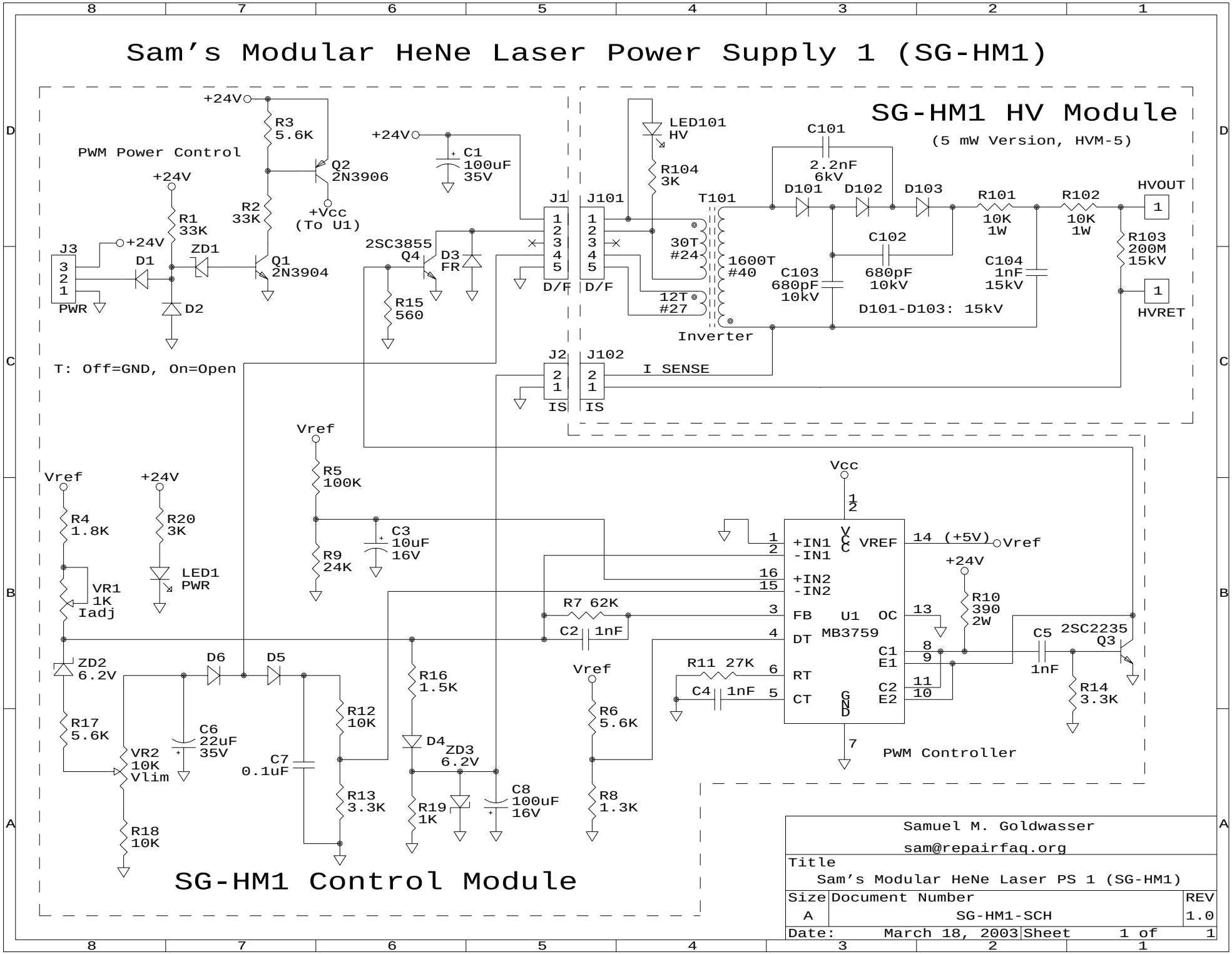

Samuel M. Goldwasser sam@repairfaq.org	
Title Sam's Modular HeNe Laser PS 1 (SG-HM1)	
Size A	Document Number SG-HM1-SCH	REV 1.0
Date: March 18, 2003	Sheet 1 of 1